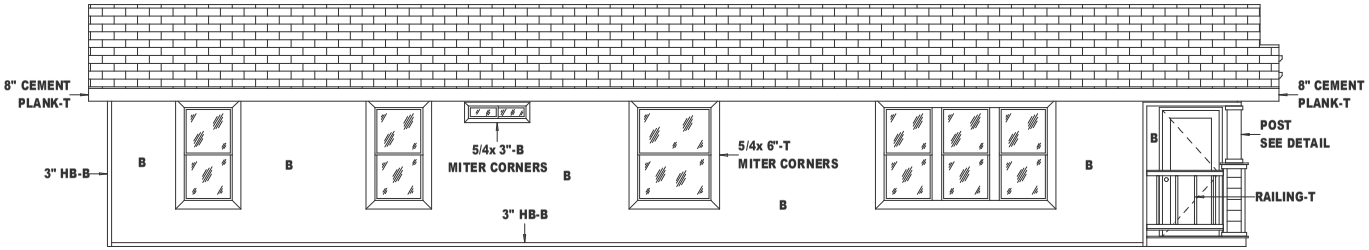

DOOR SIDE ELEVATION

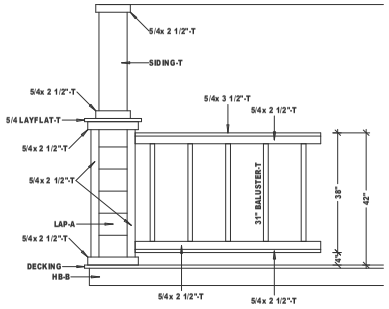

42" BUILT-OUT COLUMN DETAIL

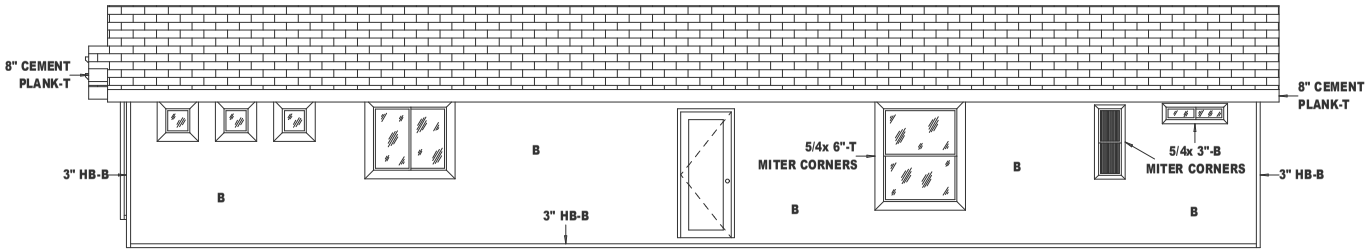

OFFDOOR SIDE ELEVATION

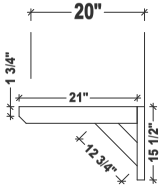

CORBEL DETAIL

W/24" EAVE AND
4" BOX BAY

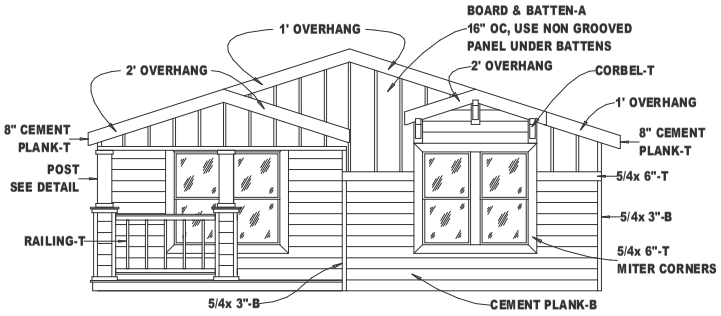

STANDARD FRONT ELEVATION

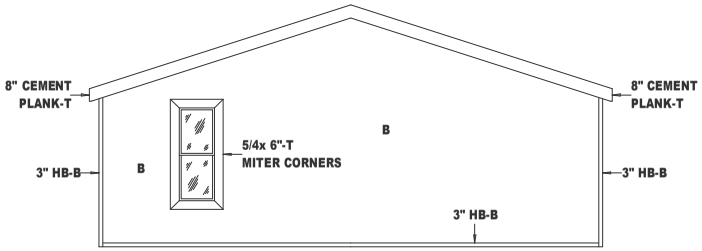

REAR ELEVATION

DURANGO
ELEVATION: WP28603A-STANDARD